SCC #38 APPROVED 7 DEC 99
MIL-STD-188-220B
Typographical Error in Data Link Control Field
Redlined

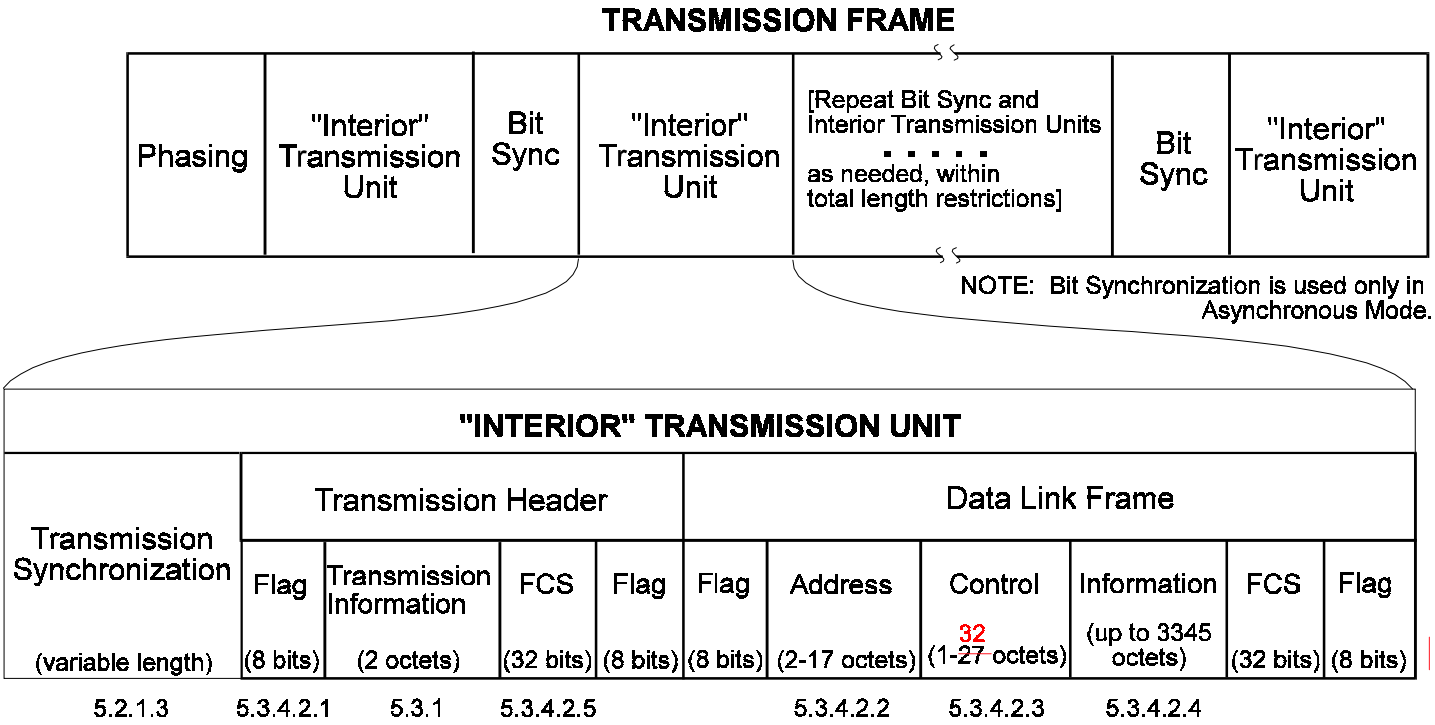

FIGURE 23. Physical-layer concatenation.

SCC #38 APPROVED 7 DEC 99
MIL-STD-188-220B
Typographical Error in Data Link Control Field

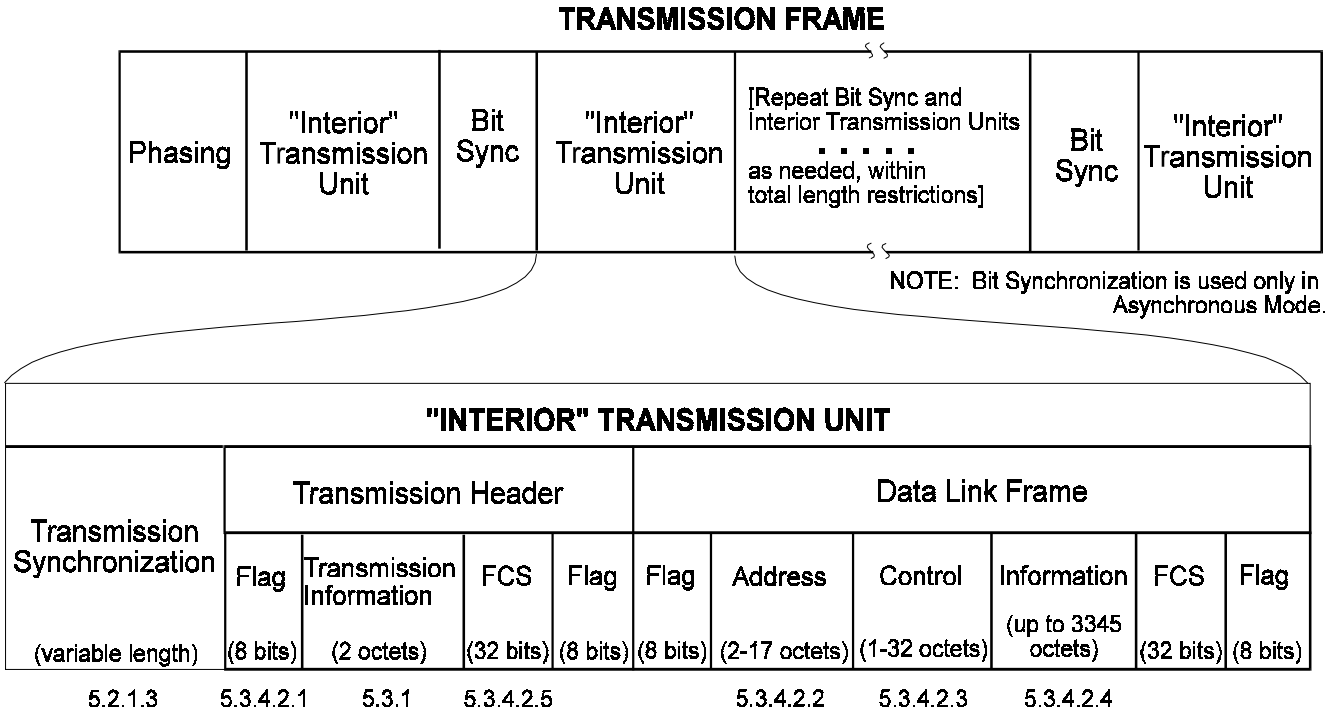

FIGURE 23. Physical-layer concatenation.